RoHS Compliant | Customer Drawing

REV.	ECN NO.	DESCRIPTION	DATE	DESIGN

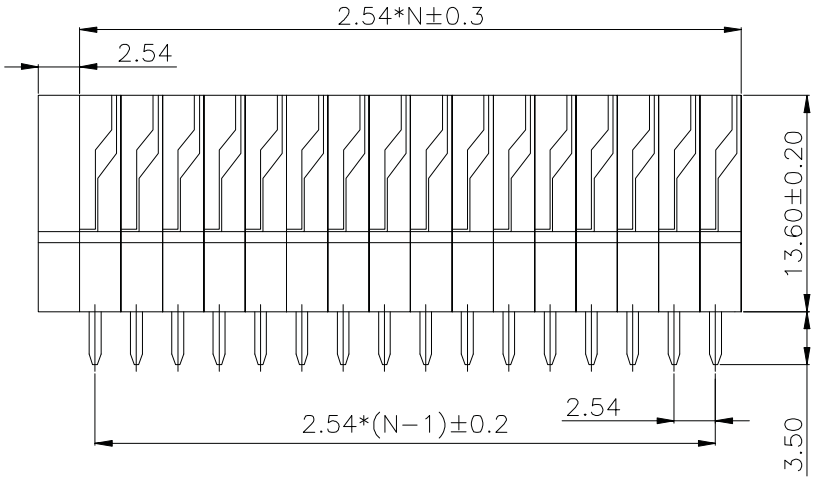

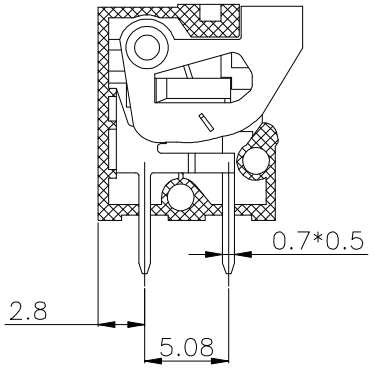

- MATERIAL
  WIRE GUARD: STAINLESS STEEL(SUB301)
  PIN HEADER : BRASS, TIN PLATED
  HOUSING : PA66, UL94V−0
- ELECTRICAL
  RATED VOLTAGE : 150V
  RATED CURRENT : 2A
  CONTACT RESISTANCE : 20mΩ
  INSULATION RESISTANCE : 5000MΩ/1000V
  WITHSTANDING VOLTAGE : AC2000V/1Min
  WIRE RANGE: 26−20AWG 0.5mm²
- MECHANICAL
  TEMP.RANGE : −40℃∽+105℃
  MAX SOLDERING : +250℃, FOR 5 SEC.
  STRIP LENGTH: 11mm

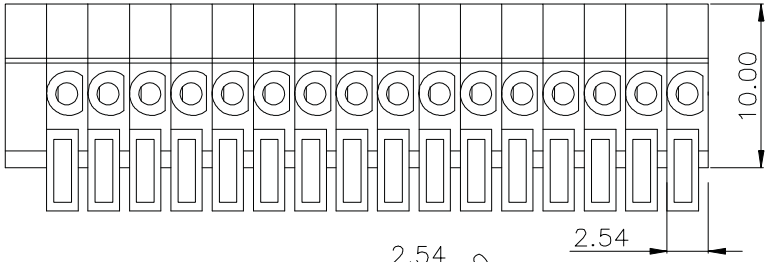

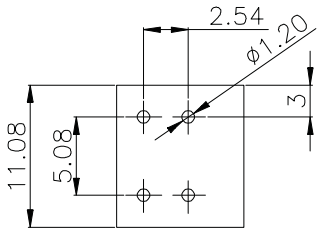

P.C.B.LAYOUT

N=No.of contacts

订购方式/HOW TO ORDER

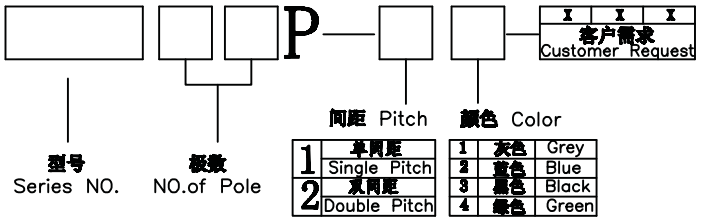

Contact Us

TEL:+86−574−63510149 FAX:+86−574−63516735
E-Mail:Sales@cxsuteng.com Website:www.cxsuteng.com

公差一览表 TOLERANCE UNLESS OTHERWISE			
X.	±0.25	X°.	±5°
.X	±0.20	.X°	±2°
.XX	±0.15	.XX°	±1°
.XXX	±0.02	.XXX°	±0.5°
日期 DATE		2012. 07. 10	

慈溪市速腾电子有限公司
SUTOWN CIXI SUTENG ELECTRONIC CO., LTD

单位 UNITS	mm	制图 DRAWING	No.01	产品名称 TITLE	ST141V—2.54
角法 VIEW		设计 DESIGN	No.06		
比例 SCALE	1:1	审核 CHKD		产品料号 PART NO.	ST141V—2.54
版本 VER	A0	核准 APPD		图号 DRAW NO.	ST141V—2.54