RoHS Compliant | Customer Drawing

| REV. | ECN NO. | DESCRIPTION | DATE | DESIGN |
|---|---|---|---|---|
| | | | | |

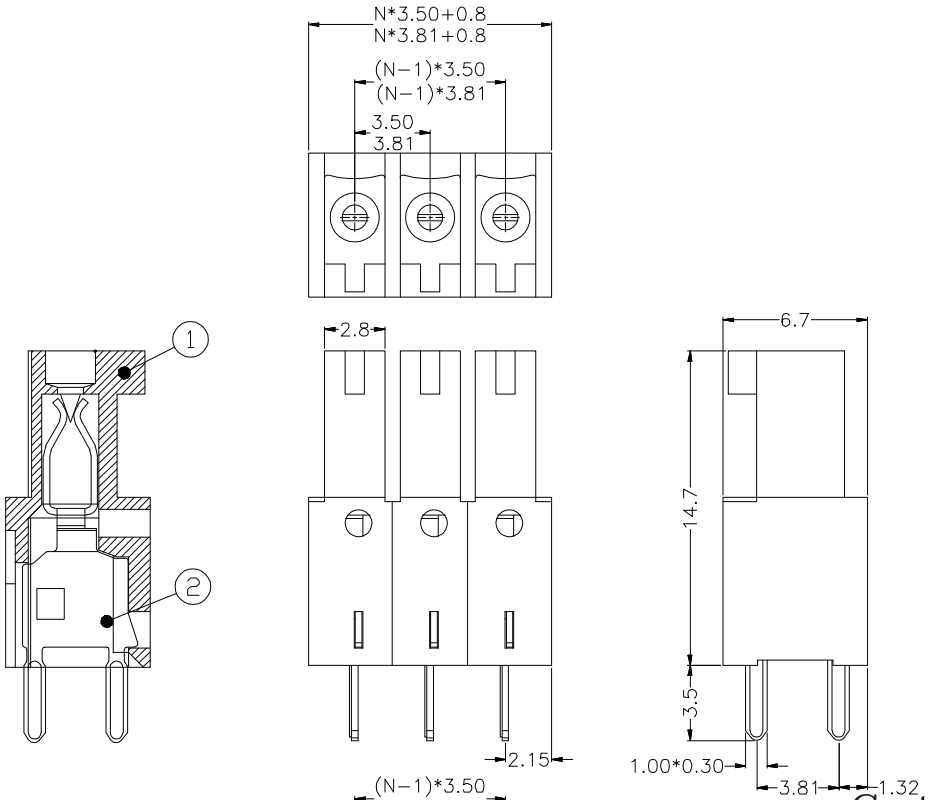


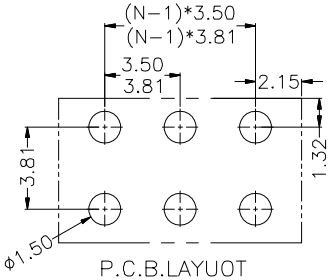


P.C.B.LAYUOT

N=Number of Poles
Dim P=(N−1)x3.50
(N−1)x3.81
Dim L=Nx3.50+0.8
Nx3.81+0.8

| Poles \ Dim | Dim P | Dim L |
|---|---|---|
| 2−6P | ±0.10 | ±0.15 |
| 7−12P | ±0.20 | ±0.20 |
| 13−18P | ±0.25 | ±0.30 |
| 19−24P | ±0.30 | ±0.40 |

·Material
①Housing: PA66, UL94V-0
②Pin header:Phosphor bronze,Tin piated

·Electrical
Rated Voltage: 300V
Rated Corrent: 8A
Contact Resistance: 20mΩ
Insulation Resistance: 500MΩ/1000V
Withstanding Voltage: AC1500V/1Min

·Mechanical
Temperature Range: -40℃～ +105℃
MAX Soldering: +250℃, 5秒(5 Seconds)

## 订购方式/HOW TO ORDER

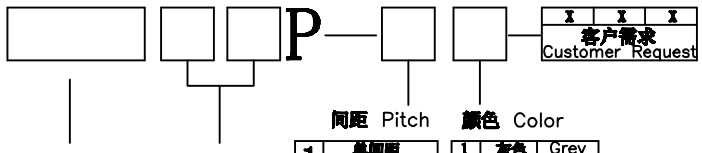


| | 单间距 |
|---|---|
| 1 | Single Pich |
| 2 | 双间距 Double Pich |

| | | |
|---|---|---|
| 1 | 灰色 | Grey |
| 2 | 蓝色 | Blue |
| 3 | 黑色 | Black |
| 4 | 绿色 | Green |


Contact Us
TEL:+86－574－63510149
FAX:+86－574－63516735
E-Mail:Sales@cxsuteng.com
Website:www.cxsuteng.com


| 公差一览表 TOLERANCE UNLESS OTHERWISE | | | | | | | | | |
|---|---|---|---|---|---|---|---|---|---|
| X. | ±0.25 | X°. | ±5° | 单位 UNITS | mm | 制图 DRAWING | No.01 | 产品名称 TITLE | ST15EDGB—3.5/3.81 |
| .X | ±0.20 | .X° | ±2° | 角法 VIEW | | 设计 DESIGN | No.06 | | |
| .XX | ±0.15 | .XX° | ±1° | 比例 SCALE | 1:1 | 审核 CHKD | | 产品料号 PART NO. | ST15EDGB—3.5/3.81 |
| .XXX | ±0.02 | .XXX° | ±0.5° | 版本 VER | A0 | 核准 APPD | | 图号 DRAW NO. | ST15EDGB—3.5/3.81 |
| 日期 DATE | | 2012.07.10 | | | | | | | |

慈溪市速腾电子有限公司
SUTOWN CIXI SUTENG ELECTRONIC CO., LTD